EE 115A
Winter 2007
Midterm Exam
Feb 12th 2007
Instructor: Prof. M.F. Chang

Name: Solution
UID:
Left student's name:
Right student's name:

Problem1:
Problem2:
Problem3:
Problem4:
Problem5:
Bonus:

Total:

Problem 1 (10%)

For the circuit shown, plot the input-output characteristics (V_{out} VS. V_{in}) for $-\infty < V_{in} < +\infty$. Assume the diodes are ideal. Please label all the important breakpoints for full credit.

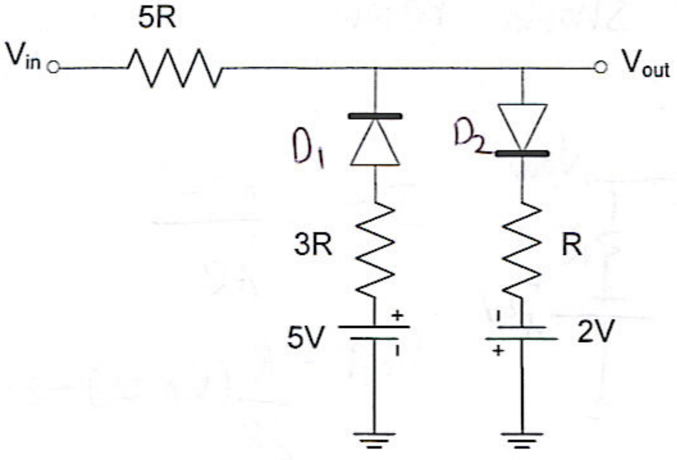

At $V_{in} = -\infty$

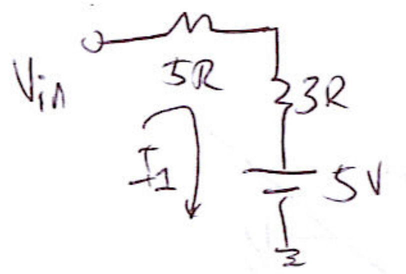

$$\frac{V_{in} - 5V}{8R} = I_1$$

$$V_{out} = 3R\left(\frac{V_{in} - 5V}{8R}\right) + 5V$$

$$= \frac{3}{8}V_{in} + 3.125$$

$$= \frac{3}{8}V_{in} + \frac{25}{8}$$

At $-2V = \frac{3}{8}V_{in} + 3.125$, $V_{in} = -13.667 \left(\frac{-41}{3}\right)$

D_2 turns on and we have the circuit shown below

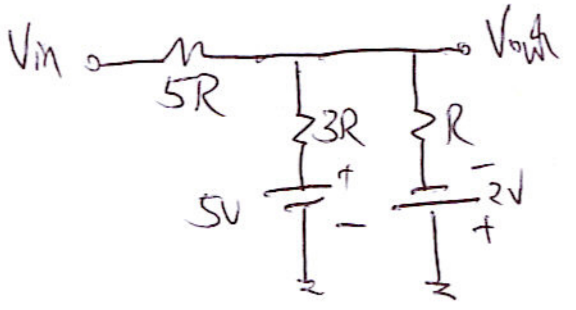

KCL at V_{out} gives us

$$V_{out} = \frac{3}{23}V_{in} - \frac{5}{23}$$

When $V_{out} = 5 = \frac{3}{23} V_{in} - \frac{5}{23} \Rightarrow V_{in} = 40$

D_1 turns off and we have the circuit shown below.

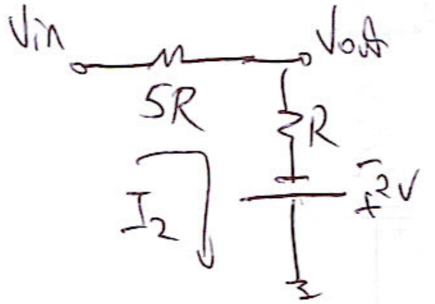

$$I_2 = \frac{V_{in} + 2}{6R}$$

$$V_{out} = \frac{R}{6R}(V_{in} + 2) - 2V$$

$$V_{out} = \frac{V_{in}}{6} - \frac{5}{3}$$

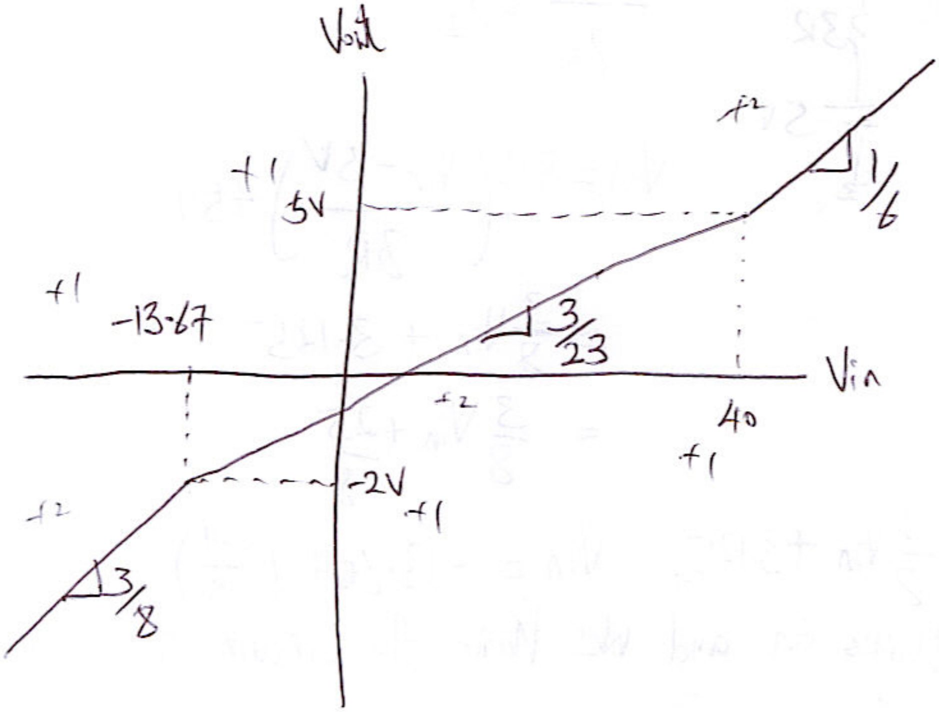

Problem 2 (20%)

For the circuit shown and the input waveform given, plot the output waveform for the duration of the input waveform for the two cases below. Assume the diodes are ideal and the capacitors are initially not charged. Label the most positive and negative output levels. Please note that this problem asks for the transient behavior of the circuit, not its steady state.

+5 (a) Assume RC>>T

+15 (b) Assume RC=T

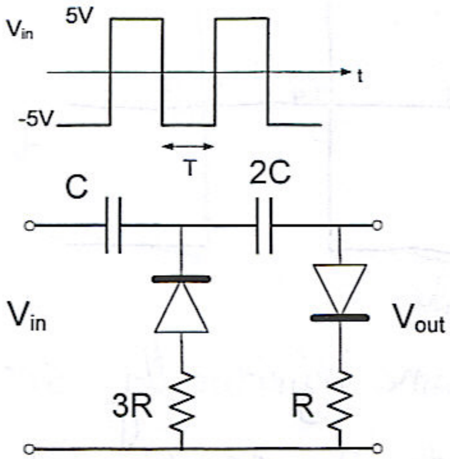

a)

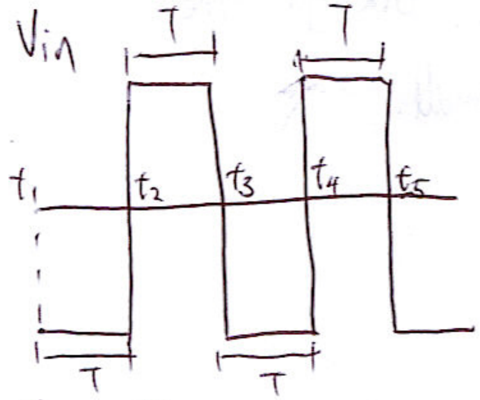

From t_1 to t_2

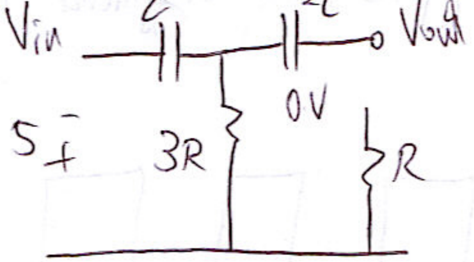

Since RC >>T, C will not get charged up!!! Therefore, the cap will remain a short for most of T and Vout ≈ -5.

From t_2 to t_3

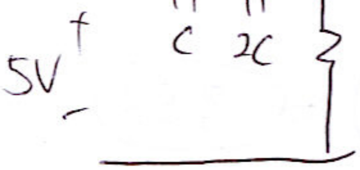

Again, Since RC >>T, neither C nor 2C will get charged up to any significant voltage and hence Vout ≈ 5

This process will continue till the end of the input duration.

So

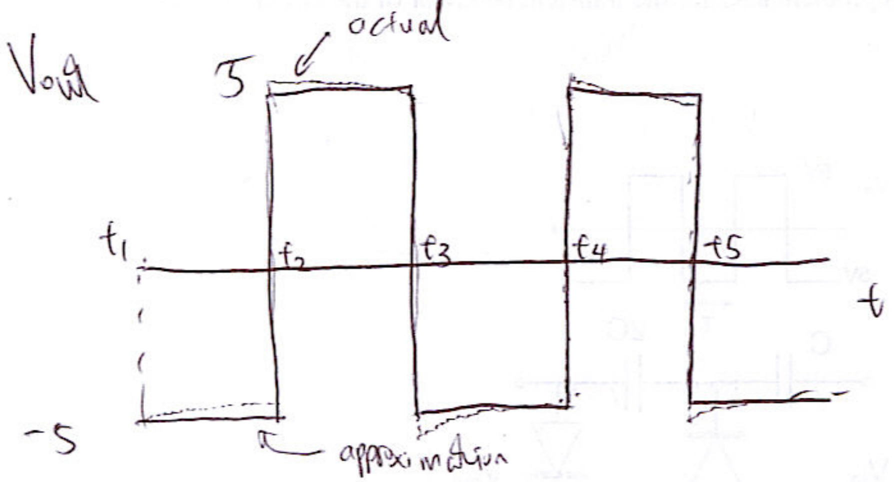

However, in reality some infinitismally small voltage will get charged onto the capacitors and eventually this process will enter steady-state. But for the first few cycles, the difference is small.

b)

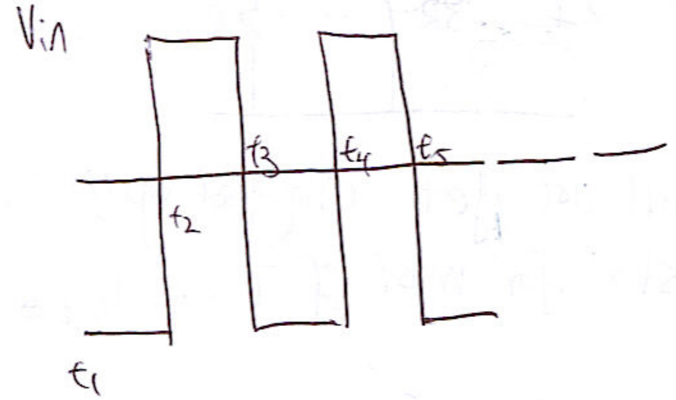

From t_1 to t_2

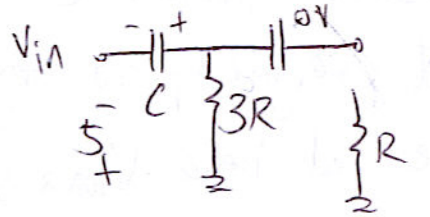

$$V_{out} = -5 + 5(1 - e^{-\frac{t}{3RC}})$$

at $= t = T = RC$

$$V_{out} = -5 + 5(1 - e^{-\frac{1}{3}}) = \boxed{-3.58}$$

At t_2, V_{in} jumps by 10V and hench V_{out} jump by 10V, so $V_{out} = -3.58 + 10V = 6.42V$

From t_2 to t_3:

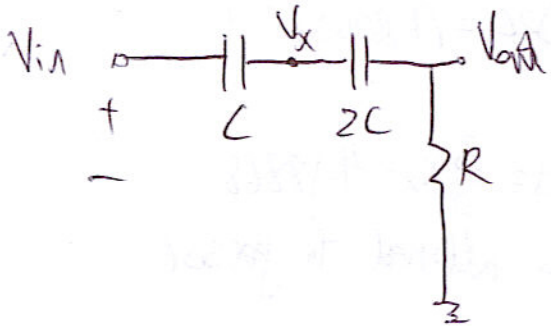

Use charge conservation at node x
We get $(V_x - V_{in})C + (V_x - V_{out})2C =$
$(-3.58+5)C$ = Total charge store on node x.

Since $V_{in}=5 \Rightarrow V_{out} = \frac{3}{2}V_x - 3.21$

If this condition is allowed to persist indefinitely, $V_{out} = 0$ and $V_x = 2.14V$

So $V_x = 6.42e^{-\frac{t}{\frac{2}{3}RC}} + 2.14(1 - e^{-\frac{t}{\frac{2}{3}RC}})$

[Note: $\frac{2}{3}RC$ because C and 2C are in series]

@ $t=RC$

$V_x = 3.095$ and $\boxed{V_{out} = 1.4325}$

At t_3, V_{in} jumps by -10 V, so V_{out} will jump by -10V as well

$\boxed{V_{out} = -8.568V}$

From t_3 to t_4

$(3.095 - 1.4325) = 1.6625$

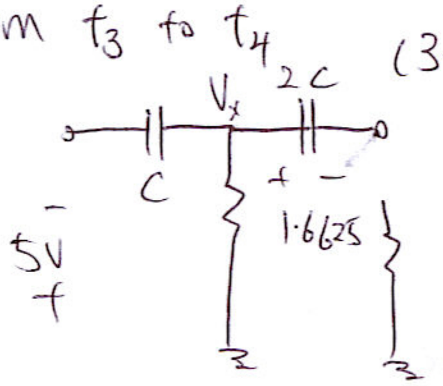

$V_{out} = (3.095 - 10)e^{-\frac{t}{3RC}} - 1.6625$

@ $t=RC$ $\boxed{V_{out} = -6.61V}$

@ t_4 V_{in} jumps by 10V, the output will also jump by 10V, so $V_{out} = -6.610 + 10 = \boxed{3.39V}$

From $t_4 - t_5$

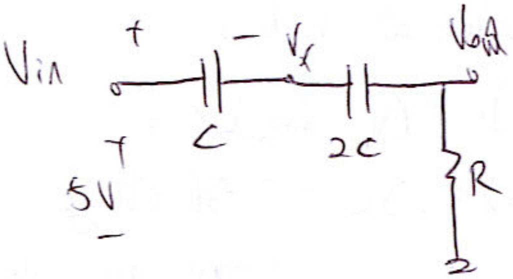

charge conservation @ node x

$$(V_x - V_{in})C + (V_x - V_{out})2C = (1.6625)2C + (-4.94765 + 5)C$$

Since $V_{in} = 5V \Rightarrow V_{out} = \frac{3}{2}V_x - 4.18868$

If this condition is allowed to persist indefinitely $V_{out} = 0$ and $V_x = 2.79245$

@ t_4 V_x also jumps to $-4.94765 + 10 = 5.052$

So $V_x = 5.052\, e^{-\frac{t}{2/3RC}} + 2.79245\left(1 - e^{-\frac{t}{2/3RC}}\right)$

@ $t = RC$, $V_x = 3.2967$ and $V_{out} = 0.75637$

@ time t_5 V_{out} jump down by -10 so -10.75637.

From t_5 and on

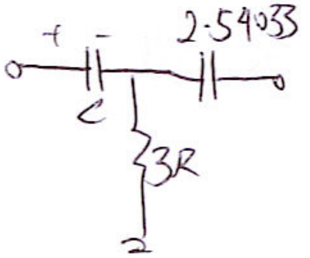

$$V_{out} = (3.2967 - 10)\, e^{-\frac{t}{3RC}} - 2.54$$

@ $t = RC$, $V_{out} = -7.343$

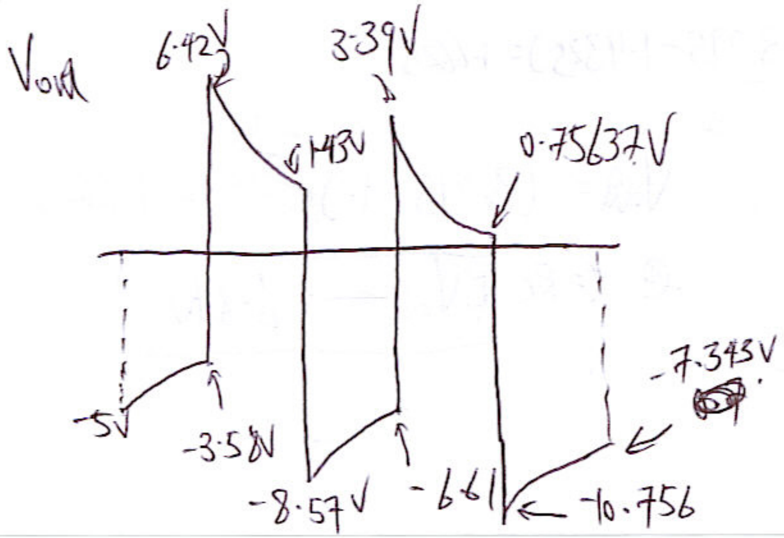

Problem 3 (30%)

For the circuit shown below assume that all V_{BE}'s=0.7V, β=100, V_{CC} equals 2.5V, $|V_{CE,Sat}|$=0.2V and the Early voltage is ∞.

10 (a) For the circuit shown in part a), if $R_{C1}=R_{C2}$=1K, what are I_{C1}, I_{C2}, the output voltage and the voltage across R_{C1}?

15 (b) For the circuit shown in part b), if $R_1=R_2$, R_{C1}=1K and $R_{C2}=0.5R_{C1}$, calculate I_{C1} and I_{C2}, the output voltage and the voltage drop across R_{C1}.

5 (c) Which bias technique would you choose and why?

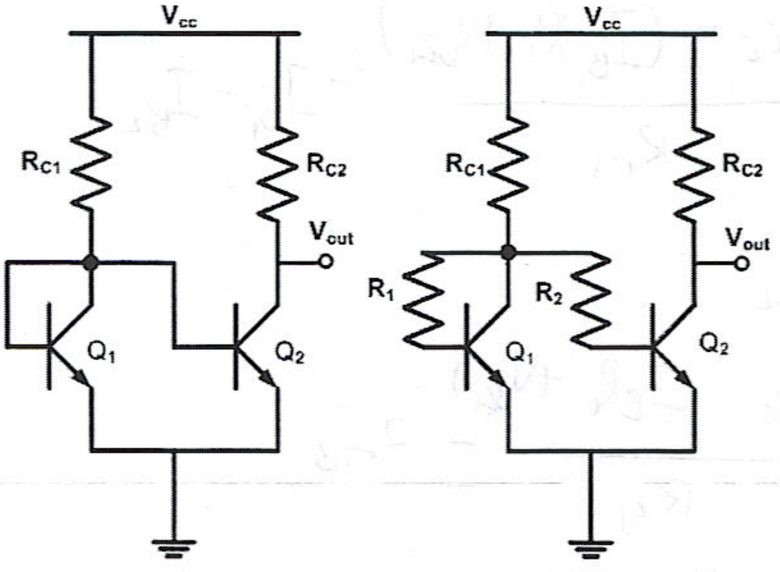

(a) (b)

Assume all I_S's are equal and $R_1=R_2 << R_{C1}$

a) $I_{C1} = \frac{V_{CC}-V_{BE}}{R_{C1}} - I_{B1} - I_{B2}$ Since $V_{BE1}=V_{BE2}$, $I_{S1}=I_{S2} \Rightarrow I_{B1}=I_{B2}$

$$I_{C1} = \frac{V_{CC}-V_{BE}}{R_{C1}} - \frac{2I_C}{\beta}$$

$$I_C + \frac{2I_C}{\beta} = \frac{V_{CC}-V_{BE}}{R_{C1}}$$

$$I_C\left(1+\frac{2}{\beta}\right) = \frac{V_{CC}-V_{BE}}{R_{C1}} \Rightarrow I_{C1} = \frac{V_{CC}-V_{BE}}{R_{C1}\left(1+\frac{2}{\beta}\right)} = \frac{2.5-0.7}{1K\left(1+\frac{2}{100}\right)} = 1.765 \text{ mA}$$

a) $I_{C_1} = I_{C_2} = \boxed{1.765\ \text{mA}}$

$V_{out} = 2.5 - 1.765 = \boxed{0.735\ \text{V}}$

$V_{R_{C_1}} = V_{CC} - 0.7 = \boxed{1.8\ \text{V}}$

b) $$I_{C_1} = \frac{V_{CC} - (I_{B_1} R_1 + V_{BE_1})}{R_{C1}} - I_{B_1} - I_{B_2}$$

$I_{B_1} = I_{B_2}$

$$I_C = \frac{V_{CC} - (I_B R_1 + V_{BE_1})}{R_{C_1}} - 2I_B$$

$$I_C = \frac{V_{CC} - V_{BE}}{R_{C_1}} - \frac{I_C}{\beta}\frac{R_1}{R_{C_1}} - 2\frac{I_C}{\beta}$$

$$I_C = \frac{V_{CC} - V_{BE}}{R_{C1}\left(1 + \frac{1}{\beta}\frac{R_1}{R_{C1}} + \frac{2}{\beta}\right)}$$ since $R_1 << R_{C1}$ $\frac{1}{\beta}\left(\frac{R_1}{R_{C1}}\right) \approx 0$

$$I_C \approx \frac{V_{CC} - V_{BE}}{R_{C1}\left(1 + \frac{2}{\beta}\right)} = 1.765\ \text{mA}$$

$I_{C_1} = I_{C_2} = \boxed{1.765\ \text{mA}}$

$V_{out} = 2.5 - \frac{1}{2} 1.765 = \boxed{1.6175\ \text{V}}$

$V_{R_{C1}} = \boxed{1.8\ \text{V}}$

Of course this is an approximation since we didn't account for the drop of R_1.

c) I would choose part b) since the collector current is less dependent on variation in V_{BE} (which results in an exponential change in I_c)

Problem 4 (30%)

For the circuit shown $I_S = 5*10^{-16}$A, β=100, Early voltage is ∞ and $|V_{CE,Sat}|$=0.2V. Assume the capacitors are large

15 (a) Calculate the small-signal parameters for both transistors.

5 (b) Draw the small-signal model for the circuit shown.

16 (c) Calculate the input and output impedances (R_{in} and R_{out}), voltage gain and current gain (A_v and A_i). (Note: The current gain is defined as the ratio of the currents flowing in the output 50Ohm resistor to that of the input 50 Ohm resistor).

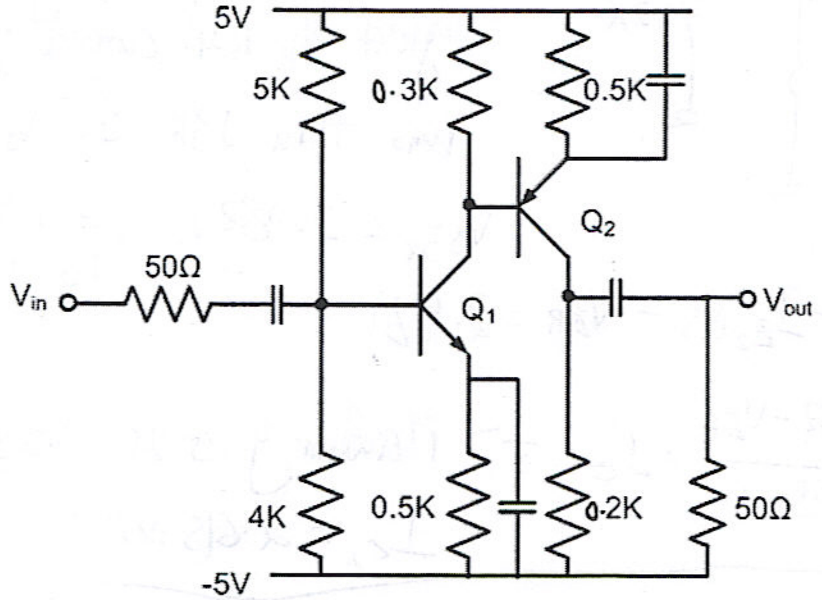

a) DC Analysis:

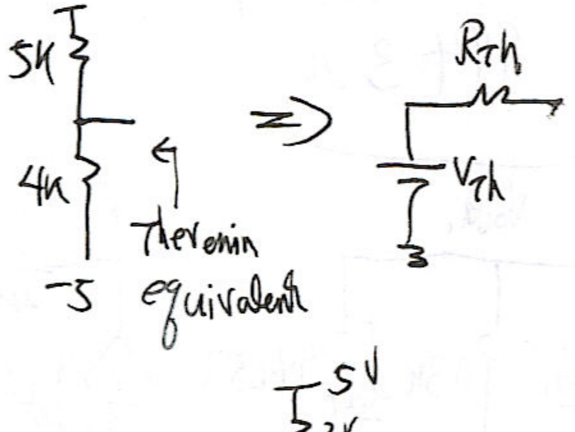

$$V_{Th} = \left(\frac{4}{5+4}\right)10 - 5 = -0.5556V$$

$$R_{Th} = \frac{(4)(5)}{4+5} = 2.22K$$

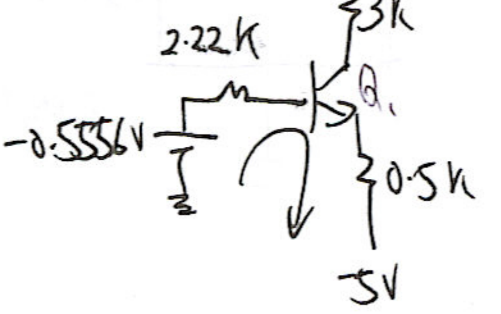

$$-0.5556 - I_B R_{Th} - V_{BE} - I_E\,0.5K = -5$$

$$\Rightarrow I_C = \frac{4.444 - V_{BE}}{0.5273}$$

Iteration gives me $V_{BE_1} = 0.787\text{ V}$

$I_{C_1} = 6.94\text{ mA}$

I_1 consists of the collector current of Q_1 and the base current of Q_2. However, since β is large we can neglect the base current of Q_2 that runs thru 0.3K. So $V_{0.3K} = (6.94)(0.3)$

$V_{0.3K} = 2.082\text{ V}$. $V_x = 2.918\text{ V}$. $(5 - 2.082)$

$\Rightarrow 5 - I_{E_2}0.5 - V_{EB} = 2.918\text{ V}$

$\frac{2.082 - V_{EB}}{0.505051} = I_C \Rightarrow$ iteration gives us $V_{EB} = 0.7614$

$I_{C_2} = 2.615\text{ mA}$

$g_{m_1} = \frac{I_{C_1}}{V_T} = 0.267 \frac{1}{\Omega}$ $g_{m_2} = 0.101 \frac{1}{\Omega}$

$r_{\pi_1} = 374.64\,\Omega$ $r_{\pi_2} = 994.3\,\Omega$

b)

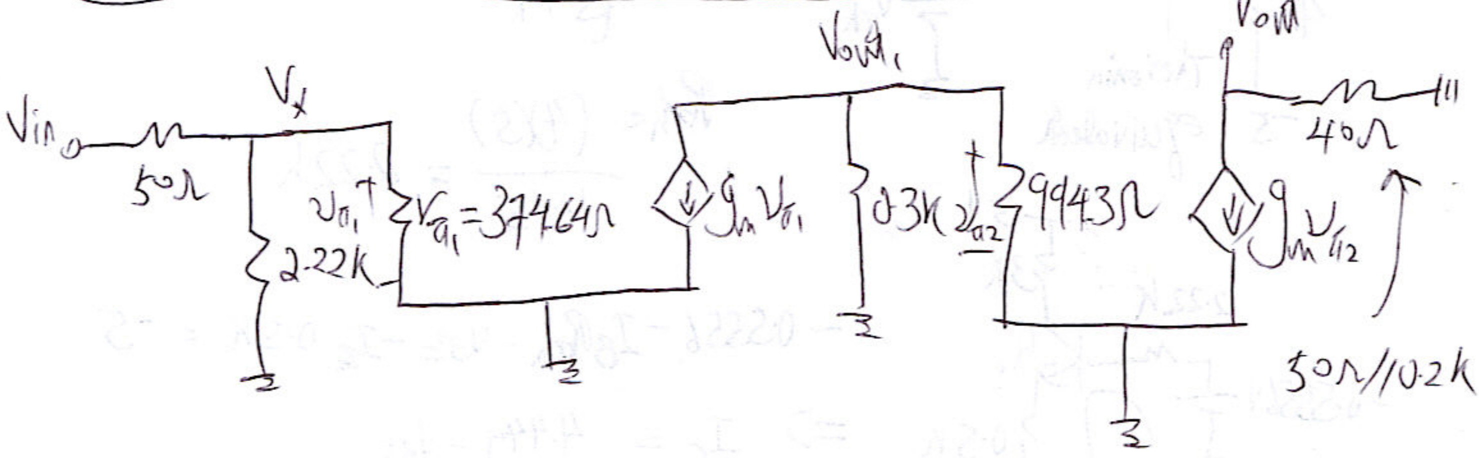

c) $R_{in} = 50\Omega + (2.22k // 374.64) = \boxed{370.5\Omega}$

$\boxed{R_{out} = 40\Omega}$

$$A_V = \left(\frac{V_x}{V_{in}}\right)\left(\frac{V_{out_1}}{V_x}\right)\left(\frac{V_{out_2}}{V_{out_1}}\right)$$

$\frac{V_x}{V_{in}} = \frac{320.5}{370.5} = 0.865,$ $\frac{V_{out_1}}{V_x} = -g_{m_1}(0.3k // 0.9943)$
$= -61.534$

$$\frac{V_{out_2}}{V_{out_1}} = (-g_{m_2})(40\Omega) = -4.04$$

$$A_V = (0.865)(-61.534)(-4.04) = \boxed{215}$$

$$A_I = \frac{\frac{V_{out}}{50\Omega}}{\frac{V_{in}}{R_{in}}} = \left(\frac{V_{out}}{V_{in}}\right)\left(\frac{R_{in}}{50}\right) = (215)\left(\frac{370.5}{50}\right) = \boxed{1593.15}$$

Problem 5 (10%)

For the 5 devices shown in table below list their regions of operation. Assume $V_{BE,ON}$=0.7V and $V_{BC,ON}$=0.5V.

	Device	V_B (V)	V_E (V)	V_C (V)
1	PNP	1	2	1
2	NPN	1	2	1
3	PNP	0.3	2	0.8
4	NPN	0	0.7	0.5
5	PNP	2	2	2.5

1) $V_{EB} = 1$, $V_{CB} = 0$ ⇒ Forward Active

2) $V_{BE} = -1$, $V_{BC} = 0$ ⇒ off

3) $V_{EB} = 1.7$, $V_{CB} = 0.5$ ⇒ Sat

4) $V_{BE} = -0.7$, $V_{BC} = -0.5$ ⇒ off

5) $V_{EB} = 0$, $V_{CB} = 0.5$ ⇒ off / Reverse Active (Edge)

Bonus (20%)

For the circuit shown below assume the Op-amp is ideal

10 (a) What is V_{out} in terms of V_{in}, I_S, and R_1.

10 (b) If $I_S = 5*10^{-16}$A, R_1=1K and $V_{BE,ON}$=0.7V, for what value of V_{in} will this circuit cease to operate at room temperature.

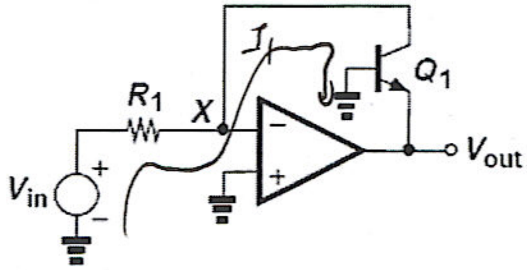

a) $I_1 = \frac{V_{in}}{R_1} = I_S \exp\left(\frac{V_{BE}}{V_t}\right)$

$V_{out} = -V_{BE} = -V_t \ln\left(\frac{V_{in}}{R_1 I_S}\right)$

b) $0.7 = V_T \ln\left(\frac{V_{in}}{R_1 I_S}\right) = 26 \ln\left(\frac{V_{in}}{(1K)(5\times10^{-13})}\right)$

$V_{in} = 0.2463\,V$

So for anything less than 0.2463 V, Q_1 is off and this circuits will fail.

$V_{in} > 0.2463$ V (for correct operation)